BODY, FLOOR - Z26NMY99A4/B4/A6/B6 (C0704087-1)

2026 RZR - RZR XP S 4 1000 ULTIMATE (R01) - Z26NMY99A4/B4/A6/B6

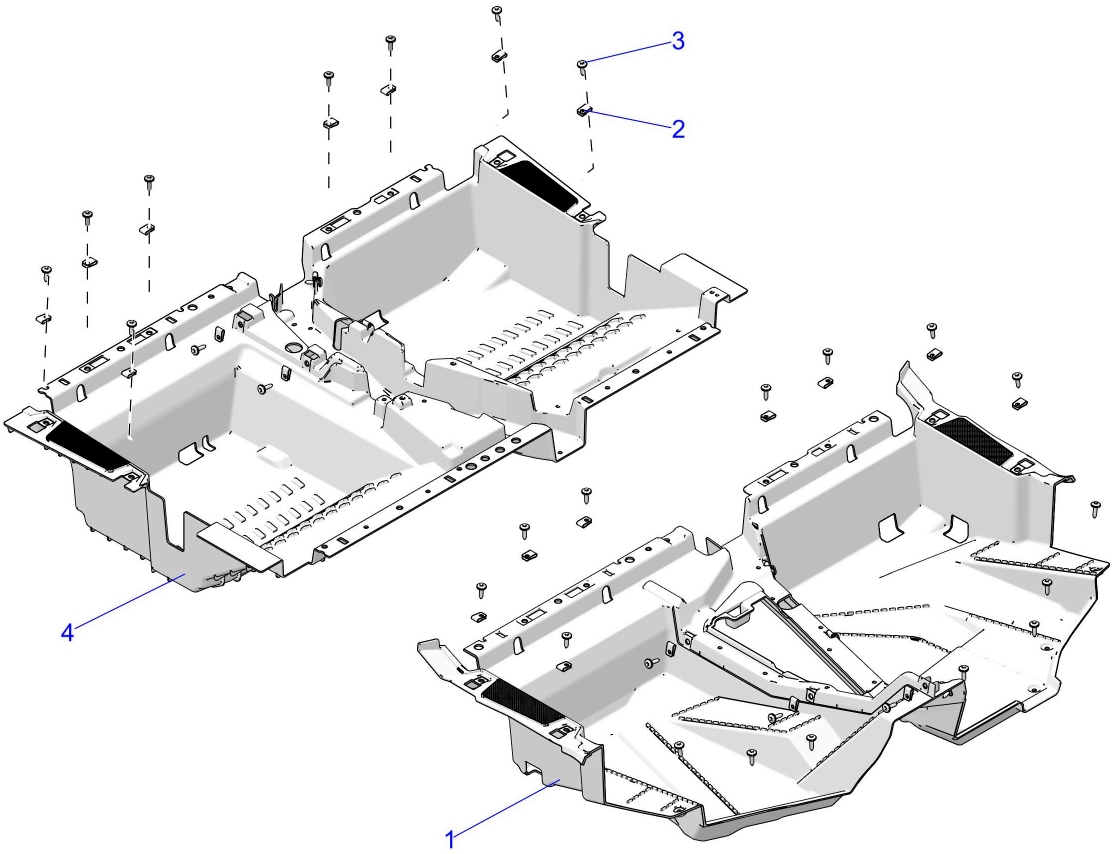

© 2021 Polaris Industries Inc. C0704087-1

Reference #	*Part#*	*Description*	*Quantity*
1	2638280-070	ASM-FRONT FLOOR,BLK [INCL. QTY. 15 OF 2]	1
2	7547674	NUT-M6-1.0, U-TYPE (2.5-3.8)	AR
3	7519650	SCR-TXTH-M6X1.0X25 ZFB	AR
4	5456575-070	FLOOR-MAIN,REAR,BLK	1

Copyright 1996-2026 Polaris Industries U.S.A All rights reserved.